10. EXPLODED VIEW

10-1. CABINET & CONTROL PANEL ASSEMBLY

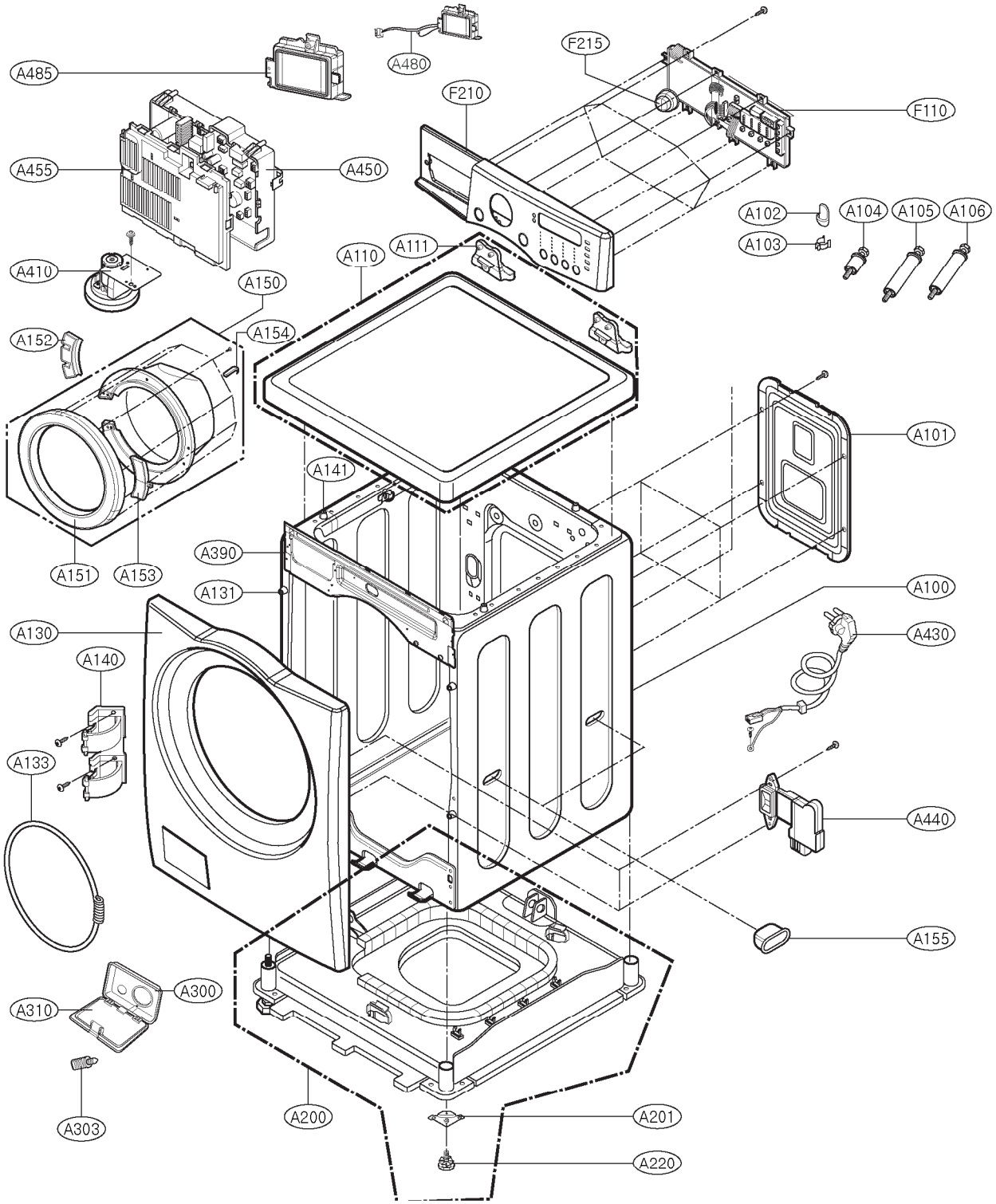

10-2.DRUM & TUB ASSEMBLY

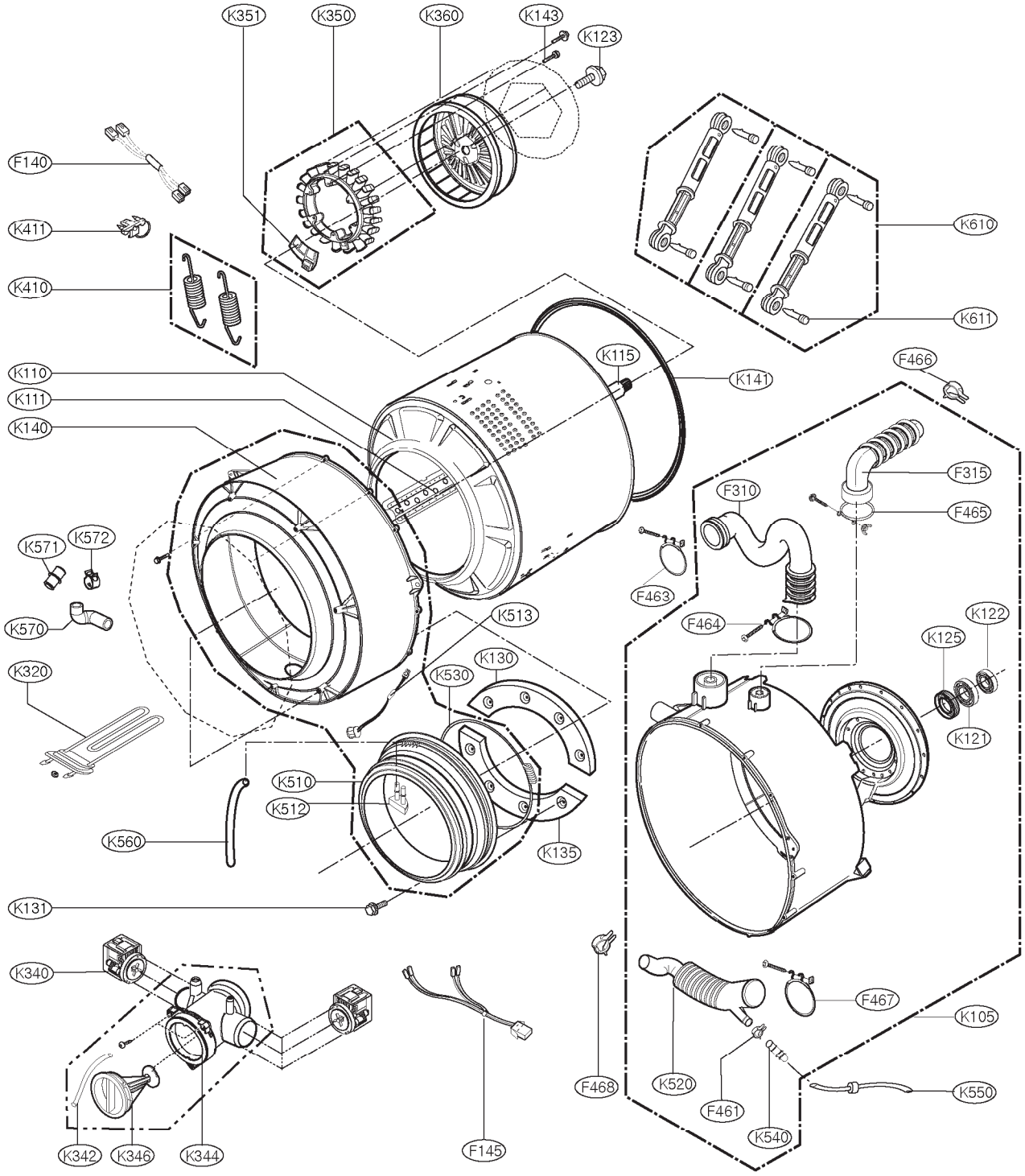
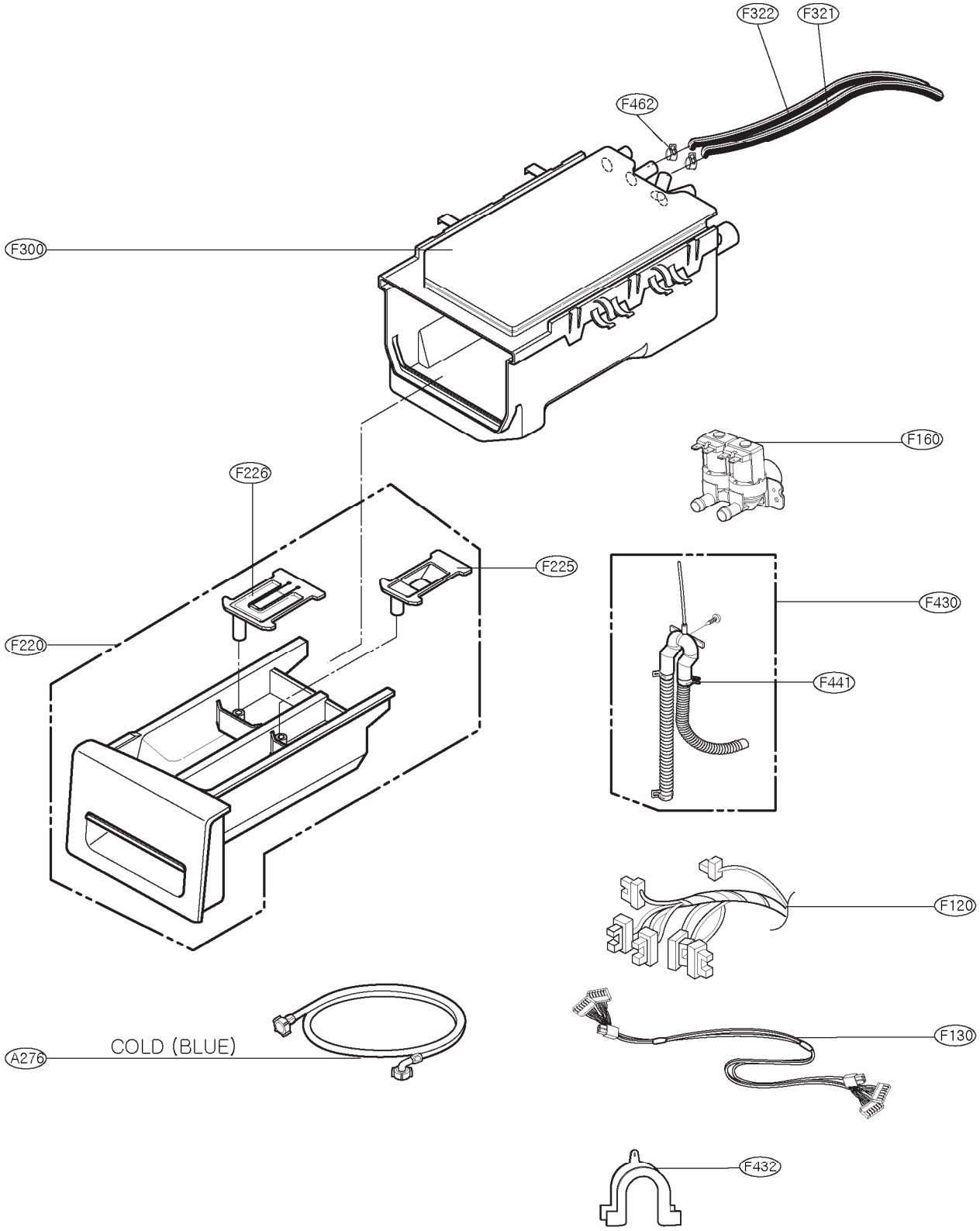
10-3.DISPENSER ASSEMBLY